BD2-2134-1182

V10 combination unit

Product code: BD2-2134-1182

IP rating **IP44**	Material **ABS**
Socket option **with sockets**	Weight (g) **1406**



Specification	Value
Product code	BD2-2134-1182
Barcode	8698523903223
IP rating	IP44
Material	ABS
Socket option	with sockets
Weight (g)	1406
Box quantity	1
Carton quantity	6

Technical drawing

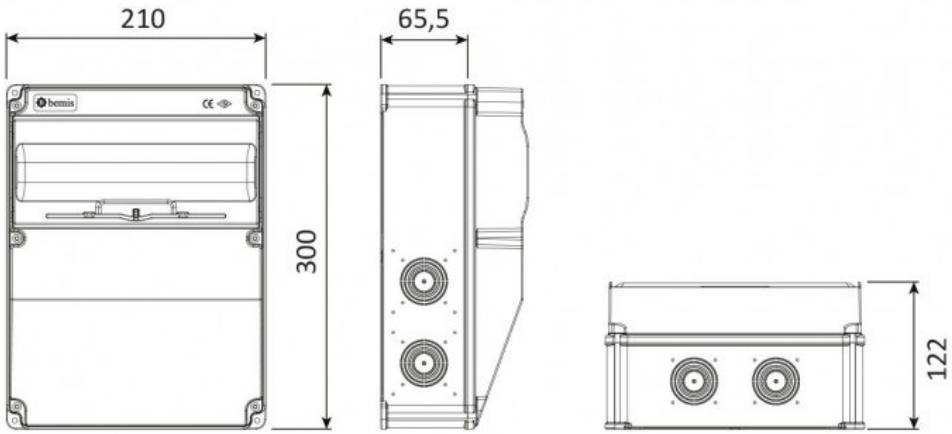

Technical values reflect the current product catalogue. Contact Bemis for installation documentation and confirmation of application suitability.